Aaryan Kushawaha
Sec :- “A”

Expression From the K – Map :-

W = A+ BC + BD

X = B’C + B’D + BC’D’

Y = C’D + CD’

Z = D
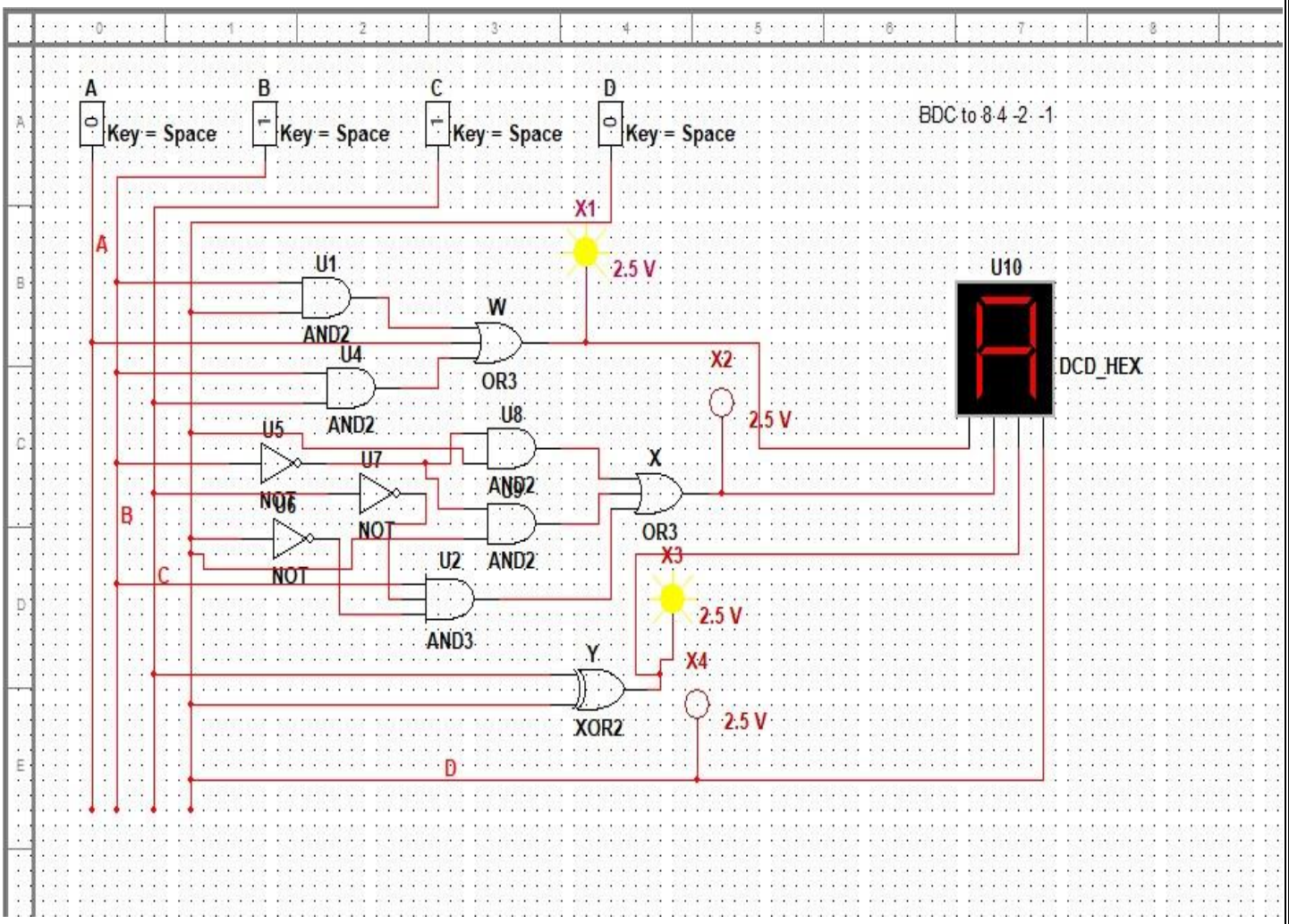
:- Logical Diagram for Input in BCD & Output in 8 4 -2 -1